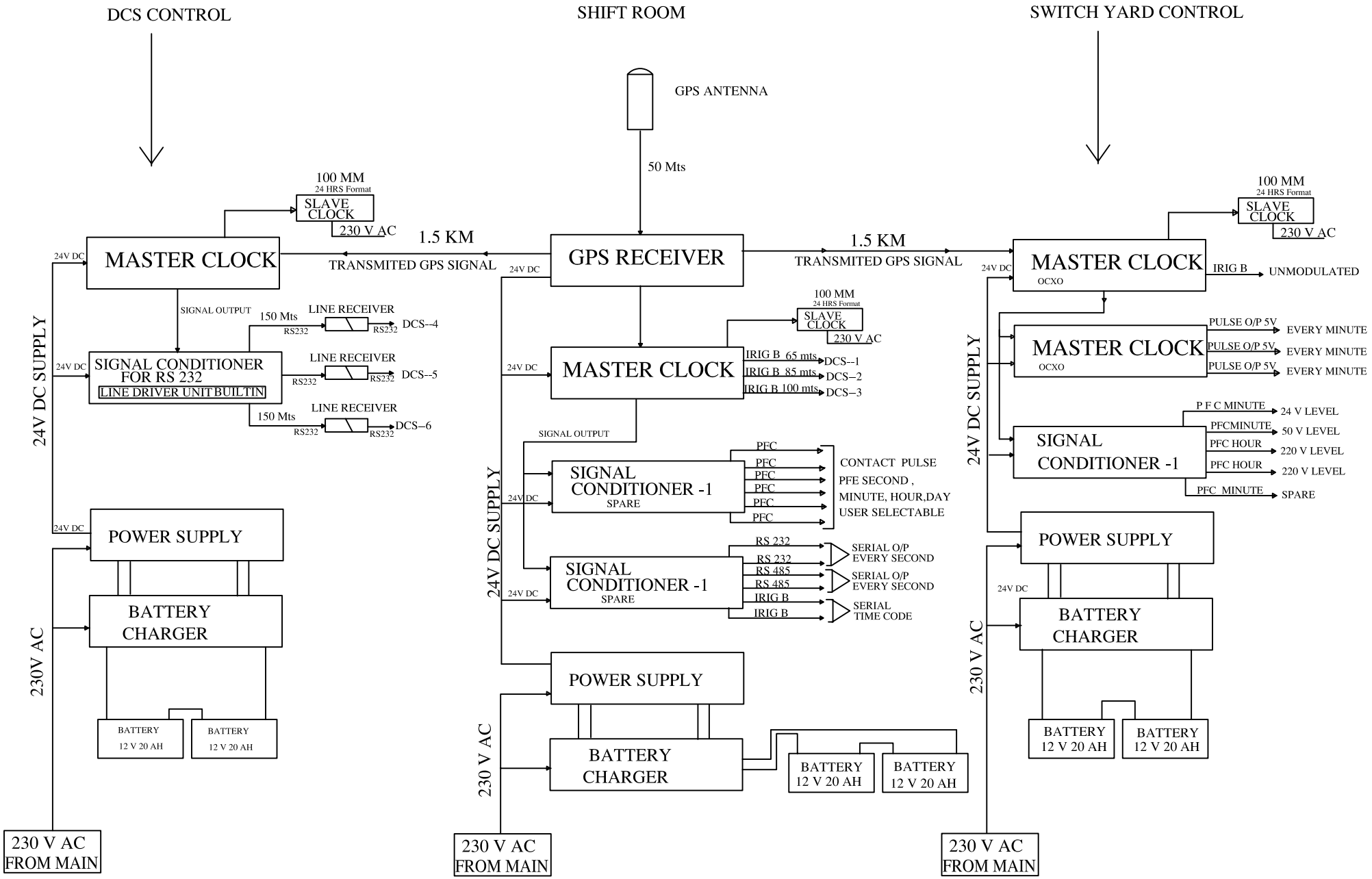

					DRN. BY: GS	SERTEL ELECTRONICS PVT. LIMITED.,	CHENNAI -96	DRAWING NO. :		
					CHKD. BY: GS	SCHEME DIAGRAM: GPS AND MASTER CLOCK SYSTEM		2003 / RGN / G2 / 165	1	
					APPD. BY: RGN					
REV	REVISION DETAILS	DRN	CHKD	APPD	DATE	DATE: 16-07-03	CUSTOMER : TYPICAL DRAWING	SHEET 1 OF 4	REV	