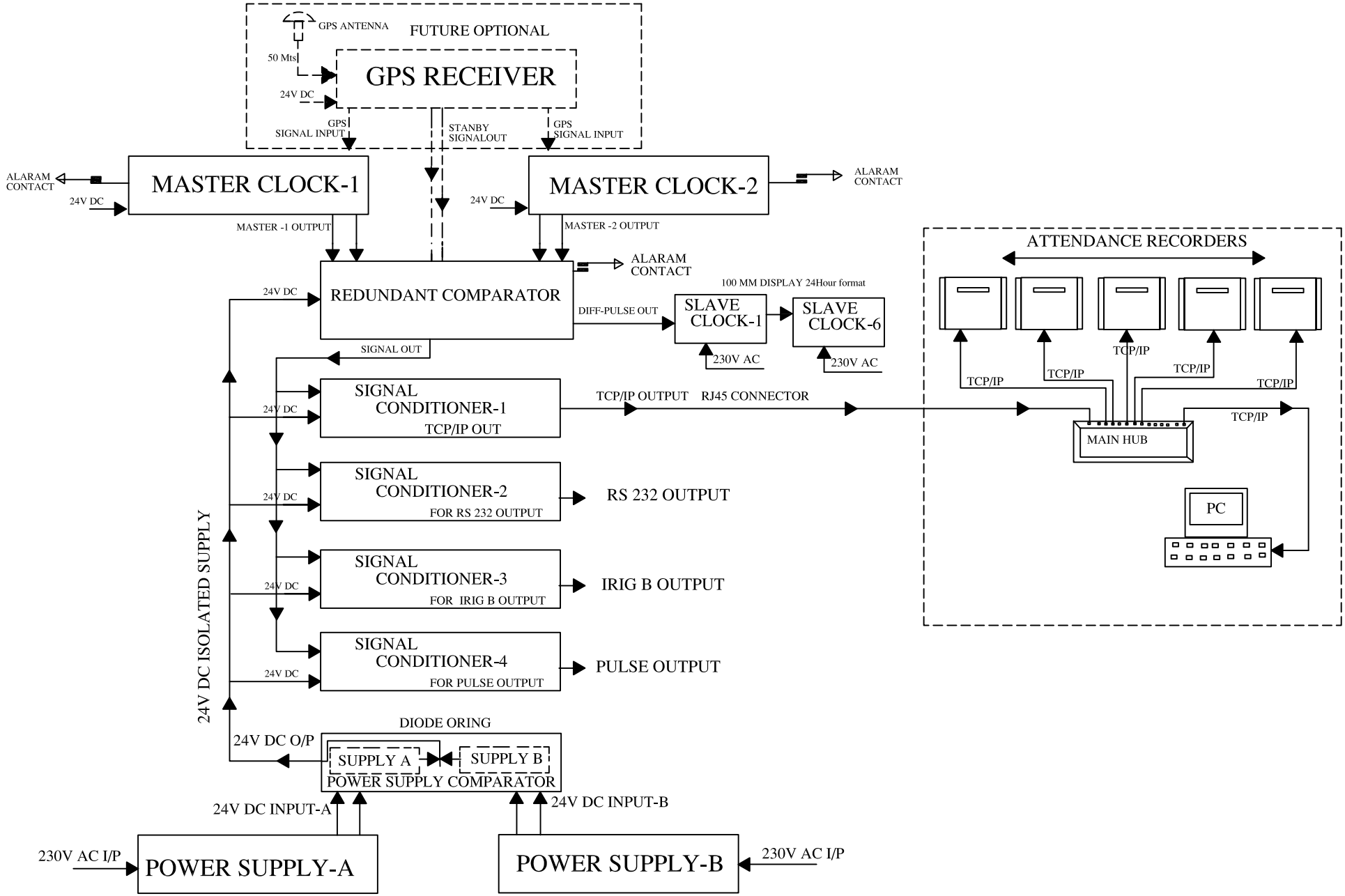

REV	REVISION DETAILS	DRN	CHKD	APPD	DATE

DRN. BY: GS
CHKD. BY: GS
APPD. BY: RGN
DATE: 19-10-04

SERTEL ELECTRONICS PVT. LIMITED., CHENNAI -96

SCHEME DIAGRAM:
GPS/ MASTER CLOCK SYSTEM GA DRAWING

TYPICAL DRAWING

DRAWING NO. :
RGN / 2004 / 10D / 1001

SHEET 1 OF 1

REV